LA10 Linear Actuator



Product Segments

- Home furniture
- Hospital & Health care
- Industry

1) open doors
2) lift tables
3) raise flat screens
4) for floor cleaning machines
5) mobile traffic signs
6) to adjust recliners for headset
7) footrests
8) relaxation beds
9) for adjusting stretchers
10) procedural tables
11) hospital beds
12) wheelchairs

OkeyGoGo' s LA10 Linear Actuator is used to get purpose that moving things in a straight line (up and down, or side to side). Our product is a powerful and reliable linear actuator for 1500N Max load capacity. It is also pre-set limit switch and designed with IP65 water protection. Linear actuators are widely used in home furniture, hospital & health care, industry.

Our linear actuators can be used in place of pneumatics or hydraulics. The heavy duty linear actuators are driven by high torque brushed DC gear motors coupled to an ACME screw to create a linear drive. The ACME screw provides efficient linear thrust that can handle loads in both the pushing and pulling orientation. The linear actuators can handle an incredible amount of static load and will hold position even when power is removed. The fixed limit switches at each end of the actuator will cut power when tripped to prevent over-run. You can option the Feedback POT , it can be used for positioning feedback if your application requires

Gerneral Features

Voltage of motor	12VDC, 24VDC
Maximum load	1500N
Max Speed No load	90mm/s
Stroke	0-1000mm (can be customized)
Mini installation dimension	Stroke +105mm
IP rating	**IP65**
Certificate	CE Rosh UL
Option	Hall sensors , Reed switch, POT
Duty cycle	25% 2 minutes on/18 Minutes off
Mounting position	H type
Inner tube	Aluminum tube or 304 stainless steel
Limit switch	Built-in , Two limited switches
Color	Silver Black
Compact size for limited space	

Drawing

Standard Dimensions (mm)

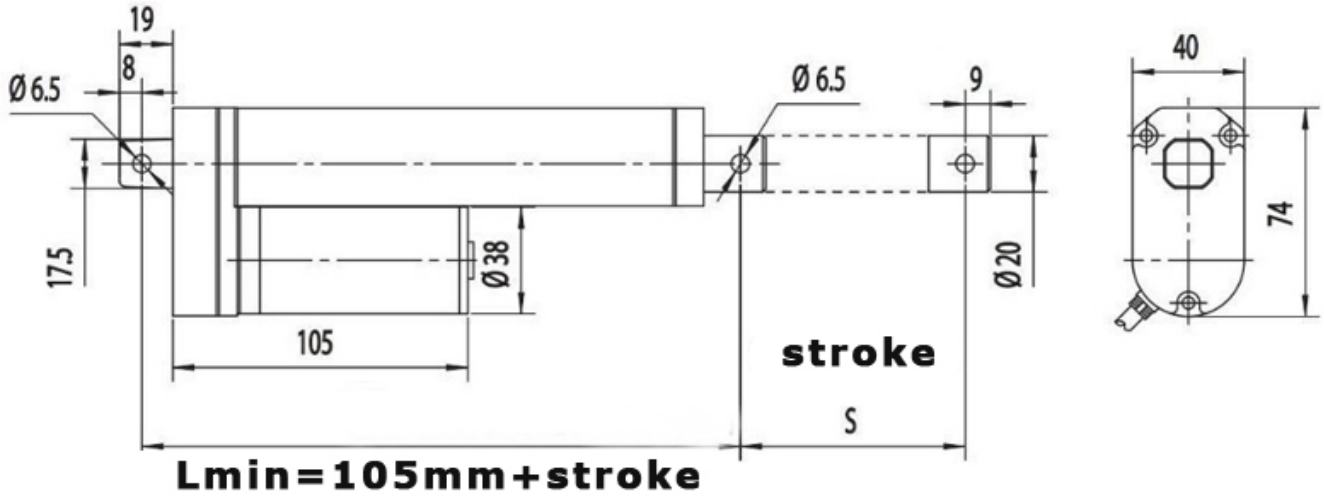

Lmin = Retracted length

Standard Lmin= **105mm+ Stroke**

Lmin means the length when linear actuator 100% fully retracts, meanwhile, it will touch the tail limited switch and stop automatically, very safe.

Lmax = Max extended length

Lmax = Lmin + Stroke =**105mm+ 2*Stroke**

Lmax means the length when linear actuator 100% fully extends, meanwhile, it will touch the head limited switch and stop automatically, very safe.

12V / 24V 50N 90mm/s								
Stroke	50	100	150	200	250	300	350	400
Retracted Length	155	205	255	305	355	405	455	505
Extended Length	205	305	405	505	605	705	805	905
Stroke	450	500	550	600	650	700	750	800
Retracted Length	555	605	655	705	755	805	855	905
Extended Length	1005	1105	1205	1305	1405	1505	1605	1705
Stroke	850	900	950	100				
Retracted Length	955	1005	1055	1105				
Extended Length	1805	1905	2005	2105				

12V / 24V 100N 60mm/s								
Stroke	50	100	150	200	250	300	350	400
Retracted Length	155	205	255	305	355	405	455	505
Extended Length	205	305	405	505	605	705	805	905
Stroke	450	500	550	600	650	700	750	800
Retracted Length	555	605	655	705	755	805	855	905
Extended Length	1005	1105	1205	1305	1405	1505	1605	1705
Stroke	850	900	950	100				
Retracted Length	955	1005	1055	1105				
Extended Length	1805	1905	2005	2105				

12V / 24V 200N 40mm/s								
Stroke	50	100	150	200	250	300	350	400
Retracted Length	155	205	255	305	355	405	455	505
Extended Length	205	305	405	505	605	705	805	905
Stroke	450	500	550	600	650	700	750	800
Retracted Length	555	605	655	705	755	805	855	905
Extended Length	1005	1105	1205	1305	1405	1505	1605	1705
Stroke	850	900	950	100				
Retracted Length	955	1005	1055	1105				
Extended Length	1805	1905	2005	2105				

12V / 24V 300N 30mm/s								
Stroke	50	100	150	200	250	300	350	400
Retracted Length	155	205	255	305	355	405	455	505
Extended Length	205	305	405	505	605	705	805	905
Stroke	450	500	550	600	650	700	750	800
Retracted Length	555	605	655	705	755	805	855	905
Extended Length	1005	1105	1205	1305	1405	1505	1605	1705
Stroke	850	900	950	100				
Retracted Length	955	1005	1055	1105				
Extended Length	1805	1905	2005	2105				

12V / 24V 500N 20mm/s								
Stroke	50	100	150	200	250	300	350	400
Retracted Length	155	205	255	305	355	405	455	505
Extended Length	205	305	405	505	605	705	805	905
Stroke	450	500	550	600	650	700	750	800
Retracted Length	555	605	655	705	755	805	855	905
Extended Length	1005	1105	1205	1305	1405	1505	1605	1705
Stroke	850	900	950	100				
Retracted Length	955	1005	1055	1105				
Extended Length	1805	1905	2005	2105				

12V / 24V 1000N 10mm/s								
Stroke	50	100	150	200	250	300	350	400
Retracted Length	155	205	255	305	355	405	455	505
Extended Length	205	305	405	505	605	705	805	905
Stroke	450	500	550	600	650	700	750	800
Retracted Length	555	605	655	705	755	805	855	905
Extended Length	1005	1105	1205	1305	1405	1505	1605	1705
Stroke	850	900	950	100				
Retracted Length	955	1005	1055	1105				
Extended Length	1805	1905	2005	2105				

12V / 24V 1500N 6mm/s								
Stroke	50	100	150	200	250	300	350	400
Retracted Length	155	205	255	305	355	405	455	505
Extended Length	205	305	405	505	605	705	805	905
Stroke	450	500	550	600	650	700	750	800
Retracted Length	555	605	655	705	755	805	855	905
Extended Length	1005	1105	1205	1305	1405	1505	1605	1705
Stroke	850	900	950	100				
Retracted Length	955	1005	1055	1105				
Extended Length	1805	1905	2005	2105				

Load VS Current VS Speed

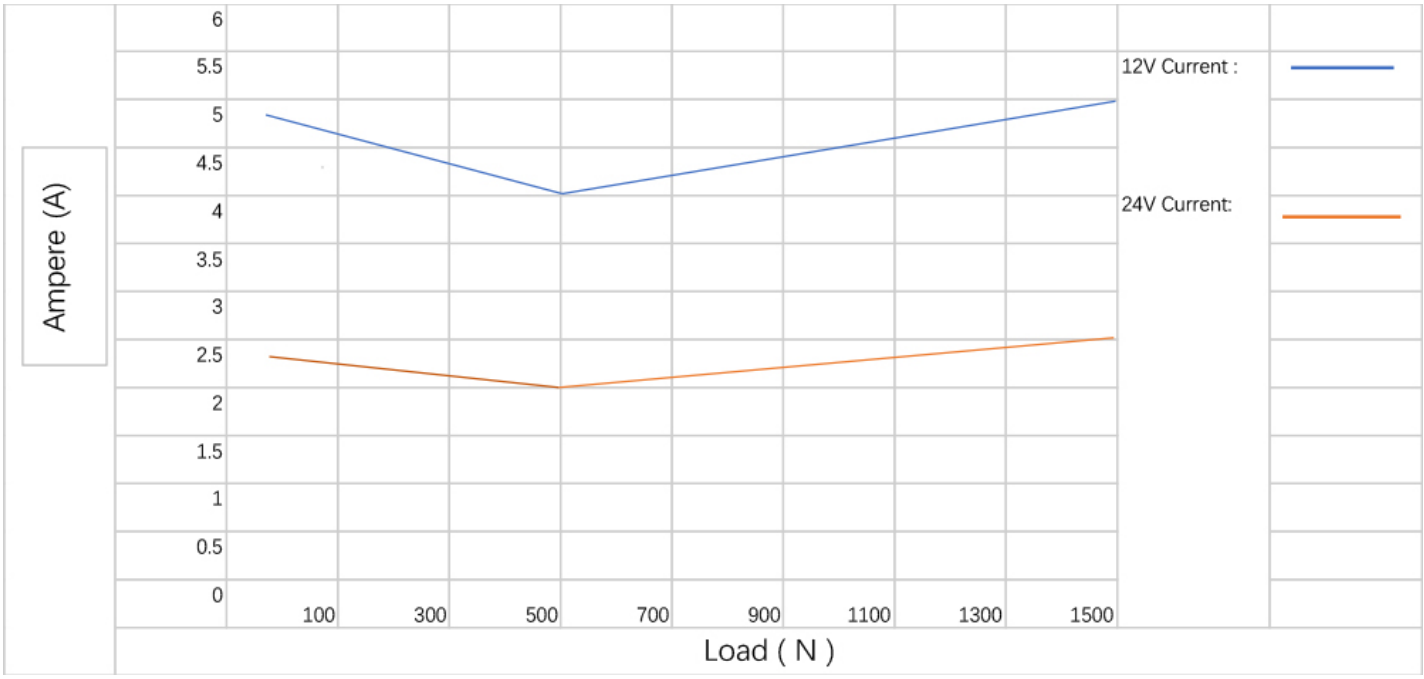

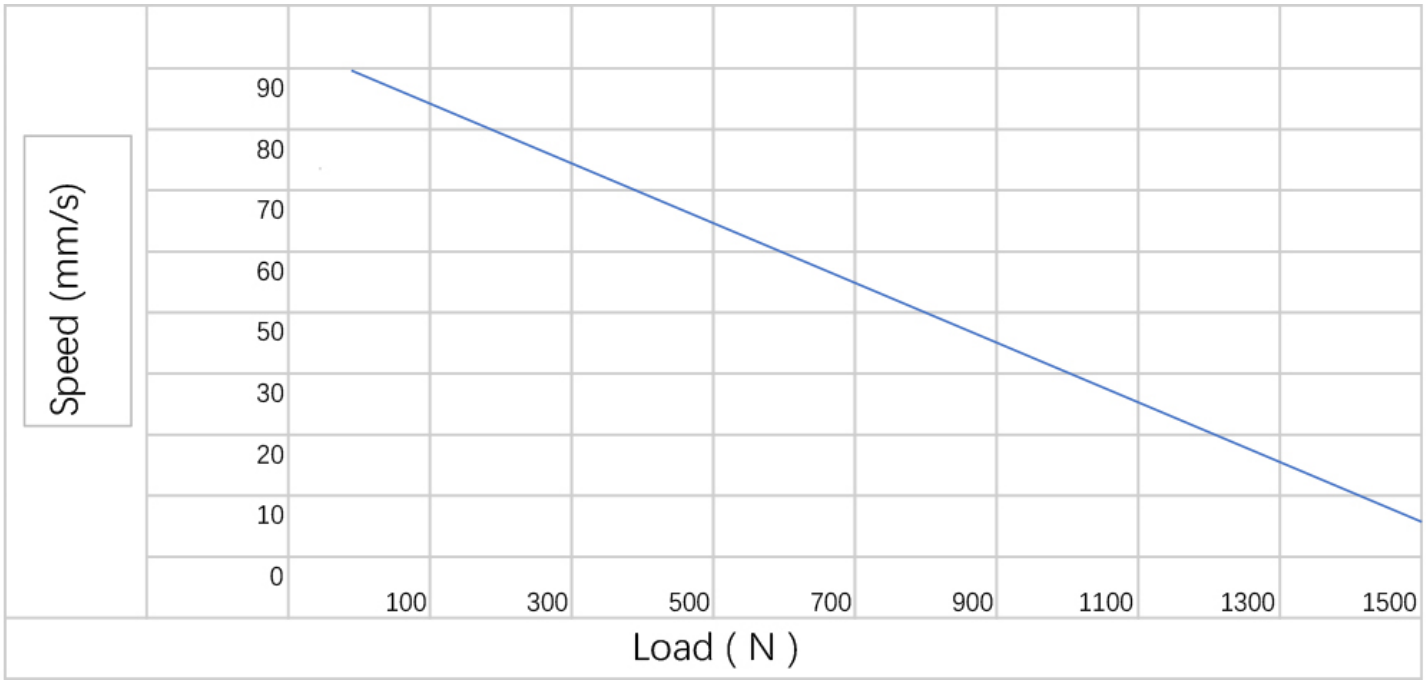

LA10 Linear Actuator Ordering Key

Voltage	1 = 12V	2 =24V		
Load	1=50N 5=500N	2=100N 6=1000N	3=200N 7=1500N	4=300N
Stroke	See Page 4, 5, 6, 7			
Retracted Length	See Page 4, 5, 6, 7			
Extended Length	See Page 4, 5, 6, 7			
Inner Tube	1=Aluminum	2= Stainless steel		
Option	1=POT(Potentiometers Sensors) 3=Reed switch		2=Hall sensors 4=Only Push NO Pull	
IP Rating	1=IP43	2=IP54	3=IP65 (total dust protection, water resistant)	
Color	1=Black	2=Sliver Grey		
Cable Length	1=50cm	2=100cm	3=Custom	

LA10 Linear Actuator Application



Other Linear Actuator Option













Contact us

Miss Anne Shen
Sales Manager

T : +86 (573) 82820391
F : +86 (573) 82820263
Mob: +86 15757399713
Skype:Walls-technology
Email: Help@OkeyGoGo.com
Web: www.OkeyGoGo.com

