Particle / Dust Sensor Module

DSM 501 Series

Features

- **Detecting dust, pollen, and particles down to 1㎛**
- **Customized sensitivity for efficient control depending on application.**
- **Excellent long term reliability and easy maintenance.**
- **Compact Size**
- **PWM Output**

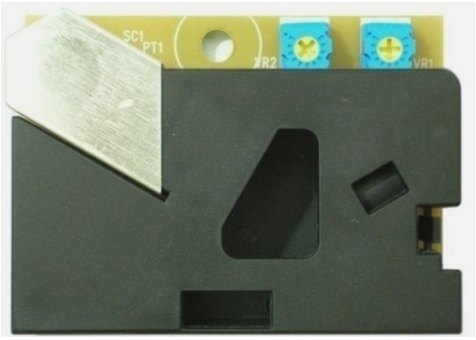

Applications

- **Air Cleaners, Air Conditioners**
- **Ventilation System, Fan Control**
- **IAQ Monitoring & Control**
- **Smoke Detectors**

Description

DSM 501 series dust sensor detects fine particles as small as 1μm and measures quantity of floating particles in a room space up to maximum 30m^3.

The sensor generates forced inflow of the sampling air, and measures the dispersion of reflected lights by particles. This measurement is then converted to PWM output signal.

The sensor is capable of detecting particles as small as 1μm size particles including house dust, pollen, mite, germ, and cigarette smoke that are known causes for respiratory disease and allergy.

DSM 501 dust sensor is an ideal and cost efficient solution for automatic control of air conditioner and air cleaner as well as monitoring indoor air quality.

SAMYOUNG S&C, a field proven specialist of humidity and temperature sensors for more than 20 years, presents another ***Sensible Sensing Solution*** for IAQ monitoring and control.

Operating Condition

Parameter	Symbol	Min.	Typ	Max	Unit
Supply Voltage	V_{CC}	4.5	5.0	5.5	V
Power Consumption	I_{CC}		90		mA
Storage Temperature Range	T_{stg}	-20		80	℃
Operating Temperature Range	T_a	-10		65	℃
Operating Humidity Range (without dew condensation)	RH			95	%RH

Electrical Characteristics

Characteristics	Min.	Typ	Max	Unit
Detectable particle size	1			㎛
Detectable range of concentration	0		15,000	pcs/283㎖
Output signal	PWM (pulse width modulation)			
Sensor characteristics	To be maintained in between the upper limit and lower limit of the standard dust sensor unit			

Output Characteristics

Vcc = 5V, Ta = 25℃

Parameter	Symbol	Condition	Min.	Typ.	Max.	Unit
Vout 1, 2 at high *1	Voh	No particle	4.0	4.3	-	V
Vout 1, 2 at low *2	Vol	Particle	-	0.7	1.0	V
Time for stabilization *3			1	-		minute

*1 : Vout 1 and Vout 2 are high state when particles are not detected. (=clean room)

*2 : Vout 1 and 2 go to low state when particles are detected.

*3 : After the power is turned on.

Sensor Characteristics vs Low ratio

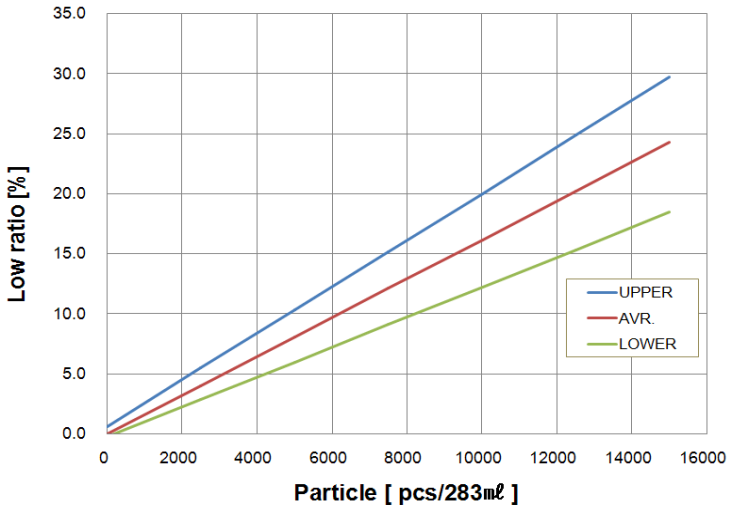

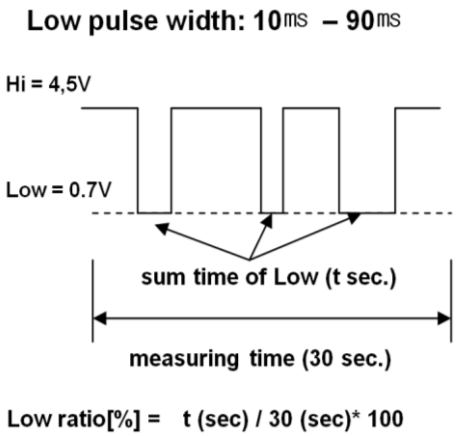

※ 1 ft^3 = 28316.85ml = 0.02831685m^3

Dimensions

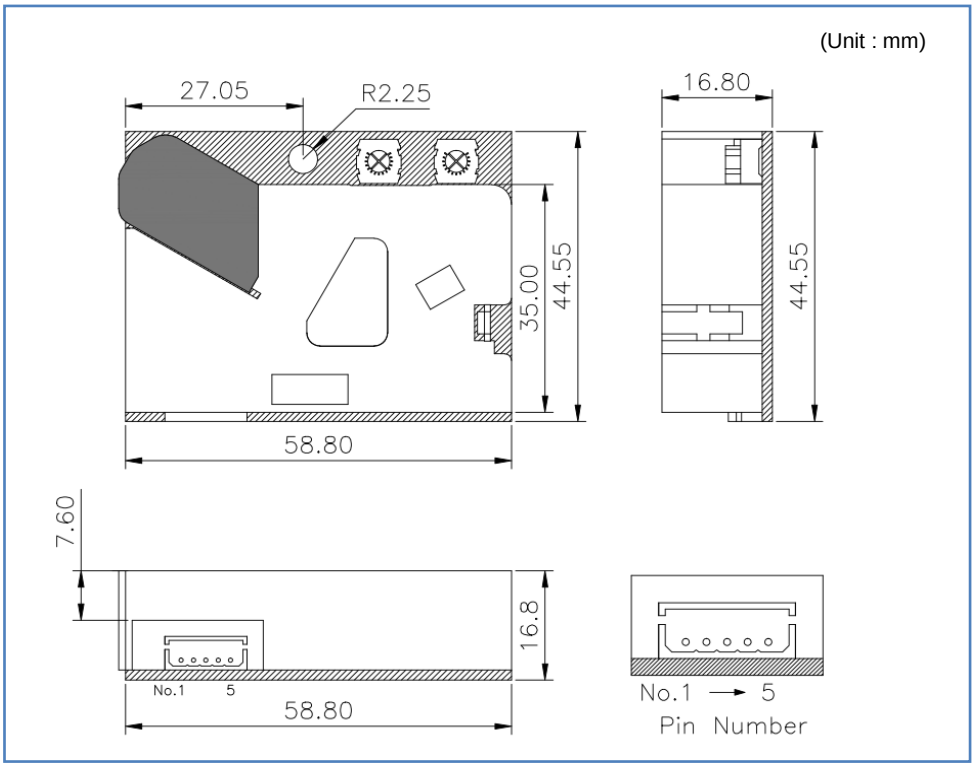

Pin out I/O Description

Pin number	Pin name	Description
1	Control	Vout 1 control
2	Vout 2	Vout 2 output (PWM)
3	Vcc	Positive power supply
4	Vout 1	Vout 1 output (PWM)
5	GND	Ground

Connector Part Number

Model name	Part No.		Description	Connector's maker
DSM501A	Wafer	20010WR-05	2mm pitch	Yeonho Electrionc
	Housing	20010HS-05		
DSM501B	Wafer	S 5B-EH	2.5mm pitch	J.S.T.
	Housing	EHR-5		

Device Overview

The dust sensor module DSM501 is a compact sized particle density sensor.

1. Quantitative particle density measurement with the principle of particle counter.

2. Fine particles of bigger than one micron could be detected with high sensitivity.

3. Inside heater induces air inflow to the module.

4. One control contact and two output contacts

A block diagram is illustrated below;

The DSM501 consists of :
1) Light Emitting Diode (LED) Lamp
2) Detector
3) Signal amplifier circuit
4) Output drive circuit 1
5) Output drive circuit 2
6) Heater induced air flow

Block Diagram

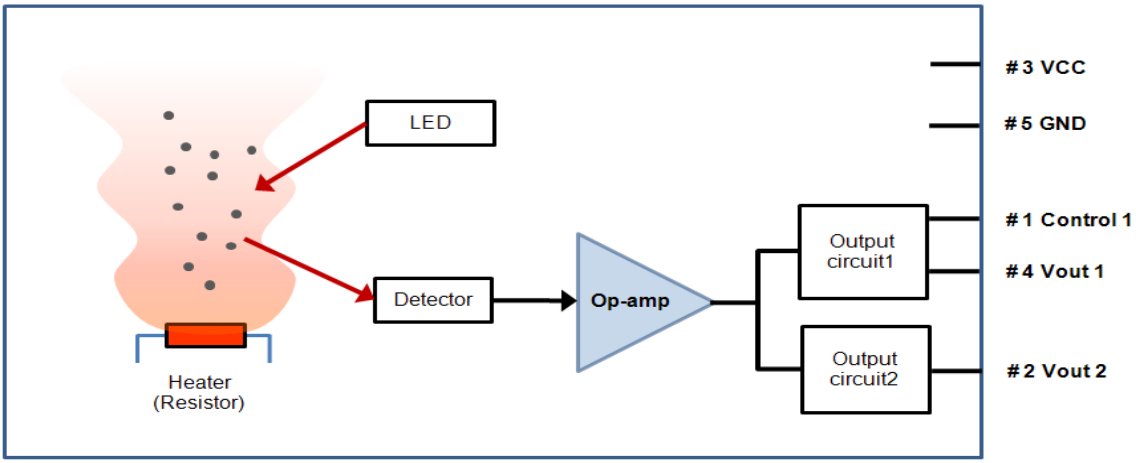

Circuit Description

This section gives a circuit description of the external connections and components of the DSM501, and can be used as a starting point for designs.

1. Control (Pin #1)
This pin is used for tuning the sensitivity when Vout1 is used.

2. Vout 2 (Pin #2)
The Vout 2 is Standard Output Port.
The sensitivity of Vout 2 pin is preset at factory. This port gives PWM output for density of particles over 1 µm.

3. Vcc (Pin #3)
Positive power (DC 5V) supply

4. Vout 1 (Pin #4)
Use this pin when adjustment of detecting level of the minimum particle size is desired. The sensitivity of Vout 1 is duller than that of Vout 2 about 2.5 times.
Adding a resistor between Control (pin #1) and Ground (pin #5), the minimum size of the particles can be adjusted from 1µm to 2.5µm. The standard (open) minimum size of particles is 2.5µm. Vout1 (pin #4) gives PWM output.

Resistor Value

Resistor value	Description
Open	Preset sensitivity (over 2.5 µm)
47K	Half sensitivity (over 1.75 µm)
22K	Equal sensitivity of Vout 2 (over 1 µm)

5. Ground (Pin #5)

This pin is used for Ground.

Type

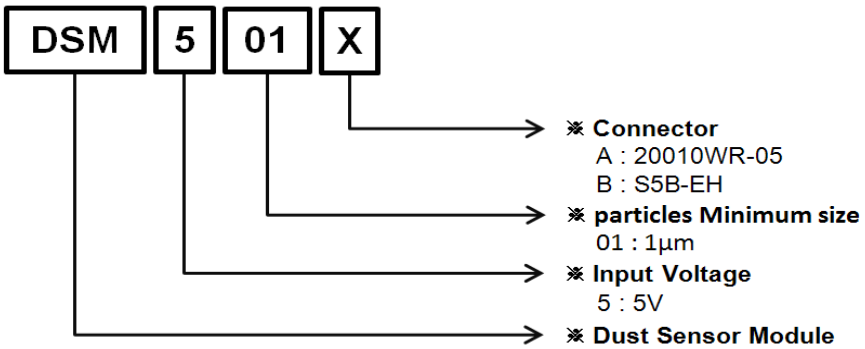

Packaging information

1.Package Marking Information

Model no.	DSM501A or DSM501B
Qt'y	000 pcs

2.Package Details

Module dimensions	: W59 x H45 x D20 mm
Weight	: Approx. 25g ea
Tray	: modules of 25pcs.(5x5) per tray
Outer box	: 10 trays per box (module 250pcs)
Outer Box Dimensions	: W380 x H255 x D320mm
Weight	: Max. 7.5Kg per outer box

Caution for Use

VR trimmer for sensitivity adjustment is set up at shipping from Samyoung S&C.
Please do not touch the VR trimmer.
Please do not disassemble the device. If the device is reassembled, it may not satisfy the specification.
If the device is used in heavily smoked or dusted environment, more frequent cleaning of the lens and maintenance such as vacuuming or air blowing is recommended.

Please **never use** this device for **Emergency** or **Fire alarm** application.

This publication is the proprietary product of Samyoung S&C and is copyrighted, with all rights reserved. Under the copyright laws, no part of this publication may be reproduced or transmitted in any form or by any means, electronic or mechanical, for any purpose, in whole or in part, without the express written permission of Samyoung S&C. Express written permission is also required before a third party may make any use of this publication.

SAMYOUNG S&C Co.,Ltd.
Head Office & Factory
150, Sangdaewon-dong, Jungwon-gu,
Sungnam-city, Kyungki-do, 462-807 Korea

Phone: +82-31-741-1830
Fax : +82-31-741-1821
e-mail: sales@samyoungsnc.com or support@samyoungsnc.com
Homepage: www.samyoungsnc.com

SAMYOUNG S&C reserve the rights, without further notice, to change the product specifications and/or the information in this document.