Magician Chassis
--DG007-P

Part list :

1 Chassis-up 1PC	2 Chassis-bottom 1PC	3 IR sensor holder 1PCS	4 encoder holder 2PCS	5 Ultrasonic module holder 1PCS
6 Speed board holder 2PCS	7 Motor holder 2PCS	8 Motor 2PCS	9 Omni wheel 1PC	10 Wheel 2PCS
11 Battery holder 1PC	12 L30 spacer 2PCS	13 L25 spacer 5PCS	14 M3*10 flathead screw 6PCS	15 M3*8 screw 4PCS
16 M3 nut 10PCS	17 M2.3*8self-tapping screw with flange 2PCS	18 M3*6 flathead screw 16PCS	19 M3*6 screw 2PCS	

Assembly instruction :

Step 1:

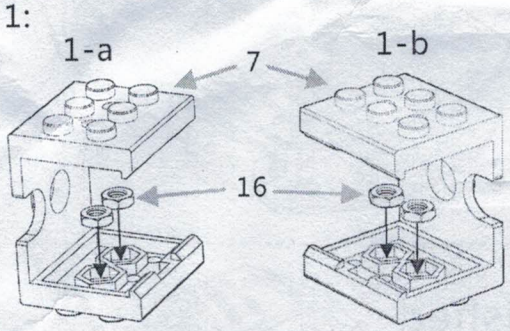

Step 2:

2-a

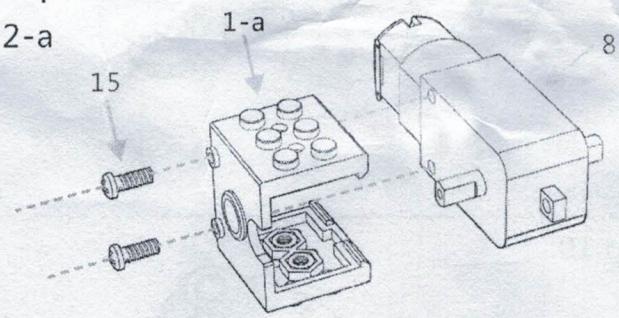

Step 3:

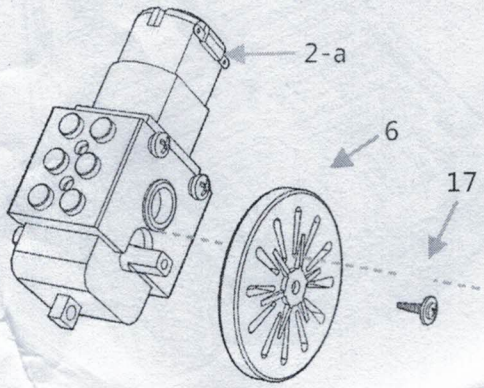

2-b

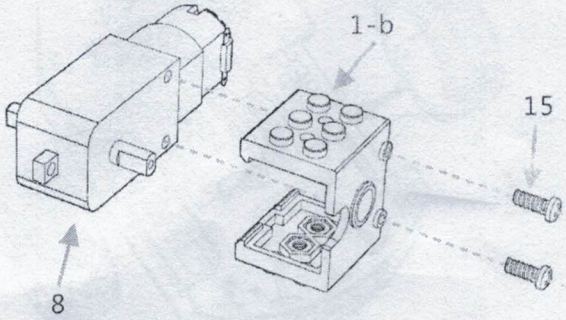

Step 4:

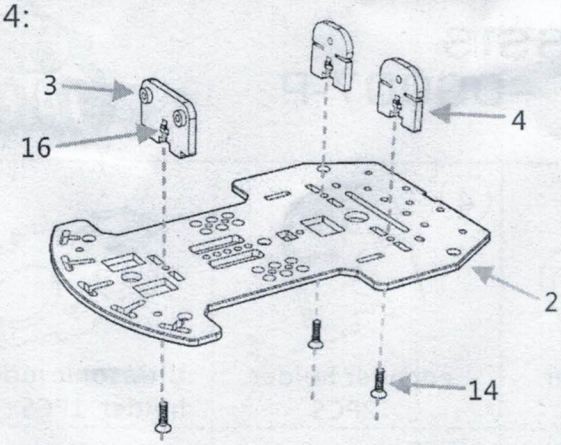

Step 5:

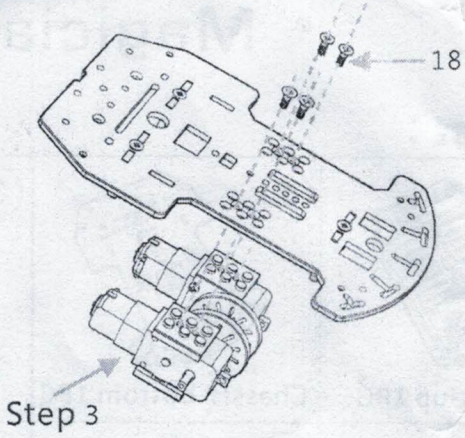

Step 6:

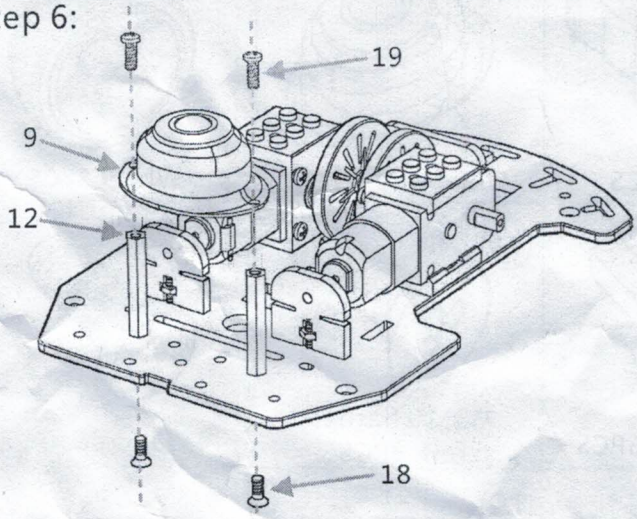

Step 7:

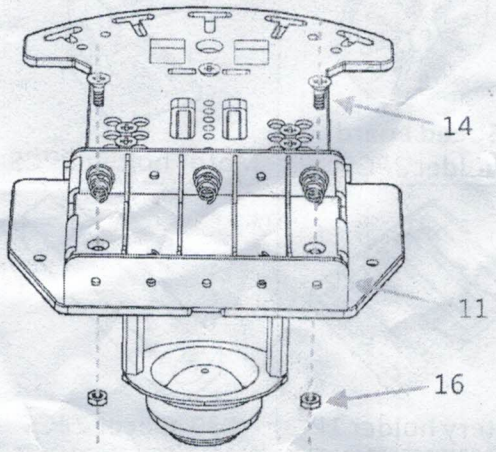

Step 8:

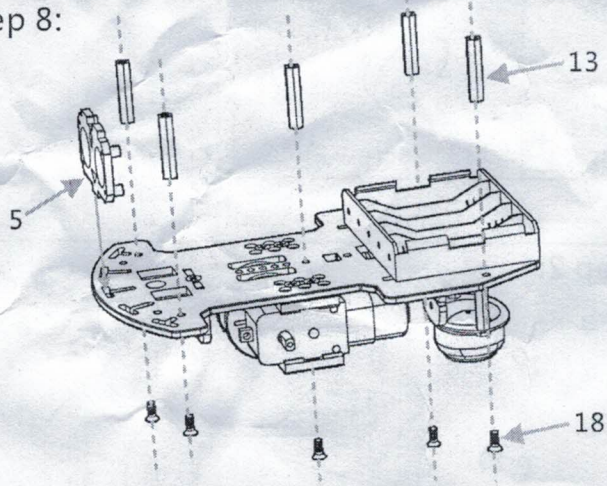

Step 9:

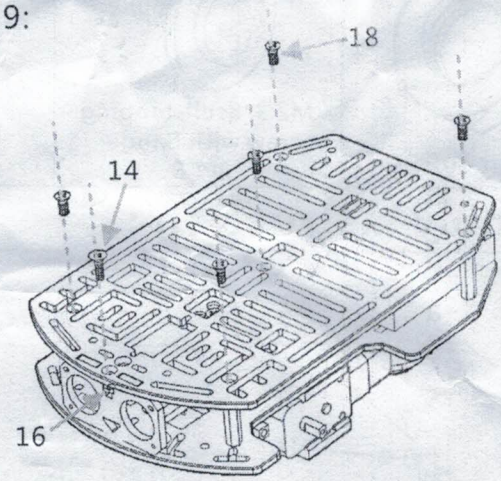

Step 10:

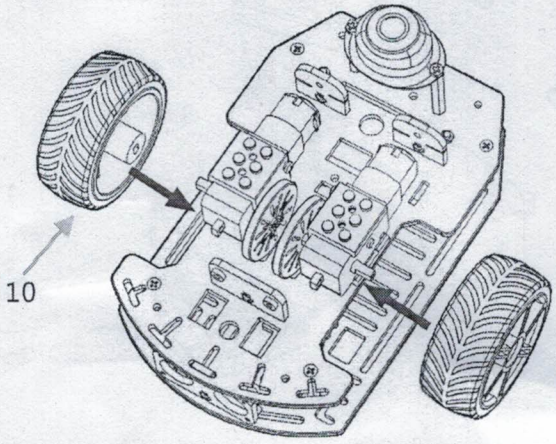
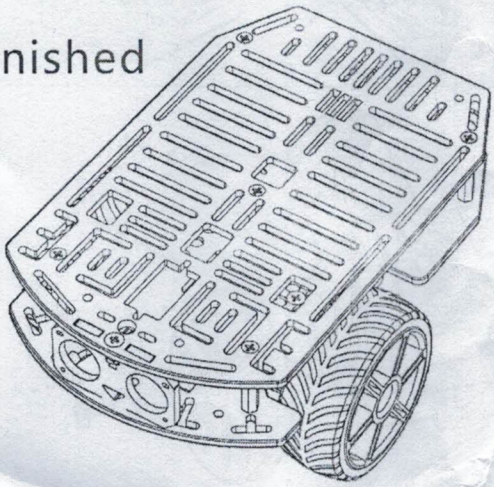
Finished