4WD chassis

DG008

Part list:

1 Chassis-up 1pc	2 Chassis-down 1pc	3 Gearbox holder 8pcs	4 Gearbox 4pcs	5 Wheel 4pcs
6 4XAA battery holder 1pc	7 L30 spacer 4pcs	8 M2.5*25 screw 8pcs	9 M2.5 nut 8pcs	10 M3 nut 8pcs (4pcs spare part)
11 M3*6 screw 8pcs (4pcs spare part)	12 M3*6 spacer 4pcs (spare part)	13 Battery holder tierap 2pcs		

Assembly instruction:

Step 1: insert the gearbox holders as below drawing

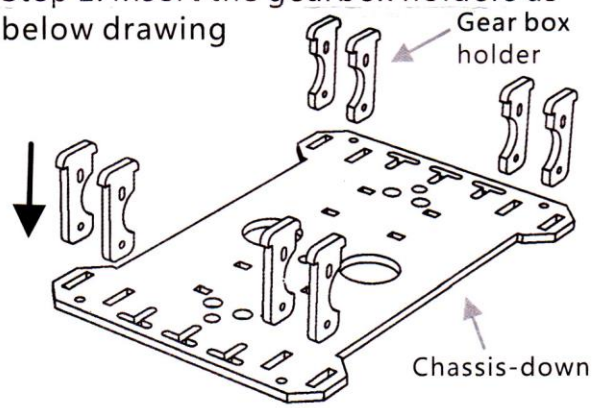

Step 2: place the gearbox as below drawing

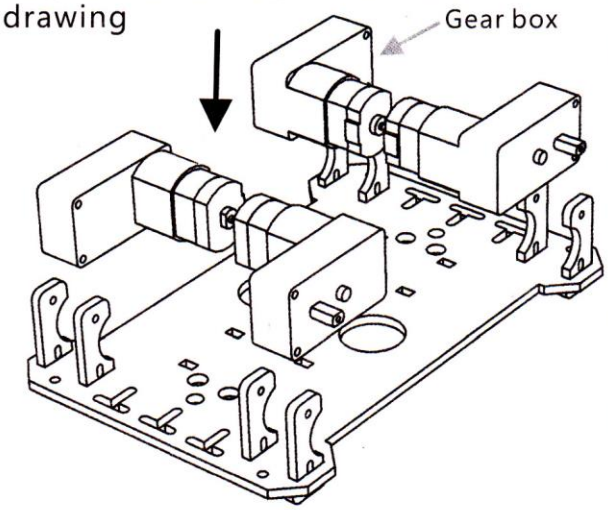

Step 3: assembly the gearbox

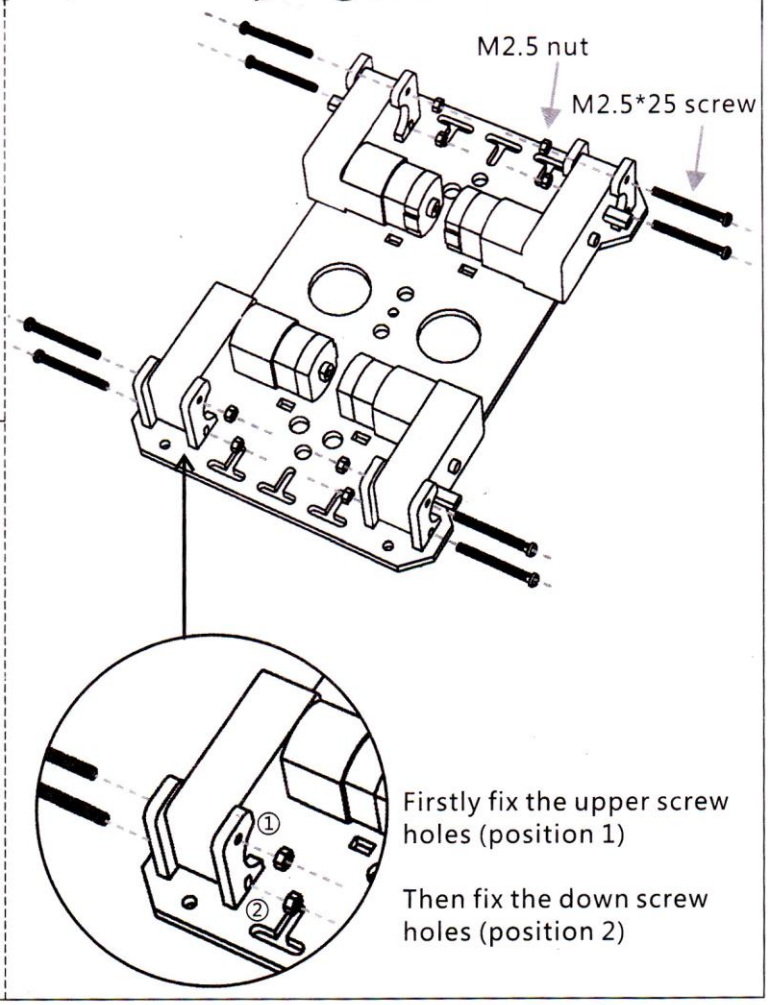

Step 4: assembly the wheel

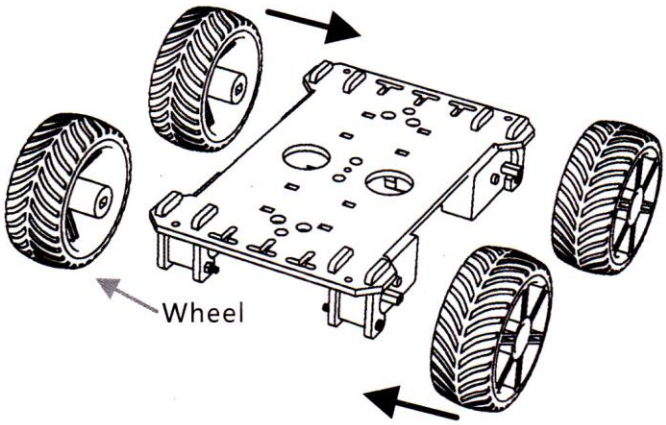

Step 5: Assembly the chassis-up

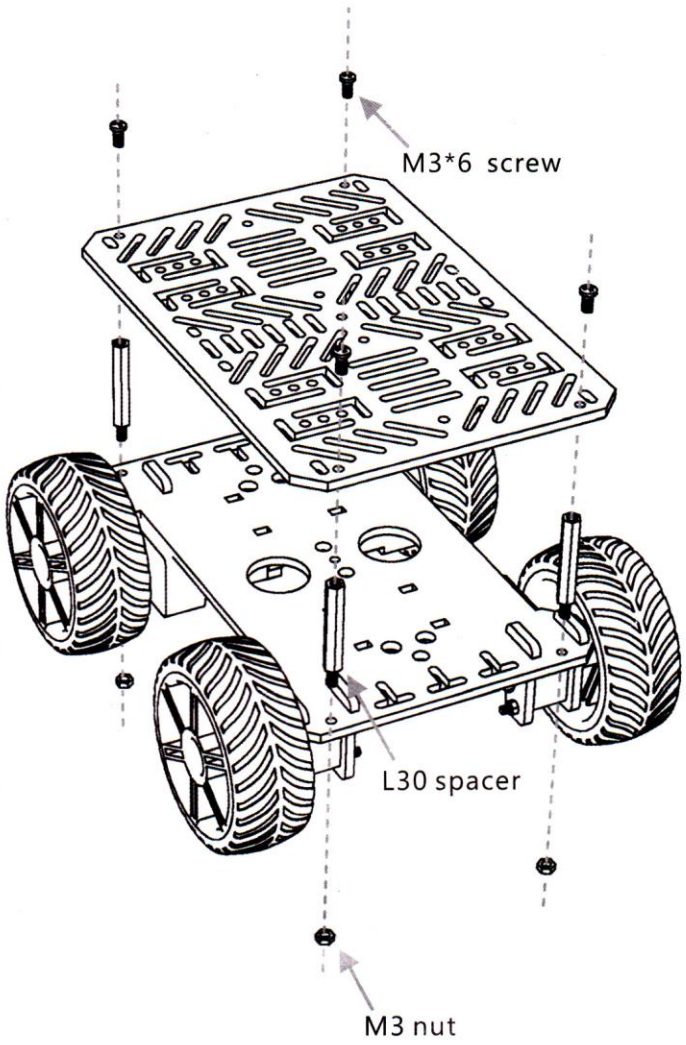

Step 6: put the battery holder in place

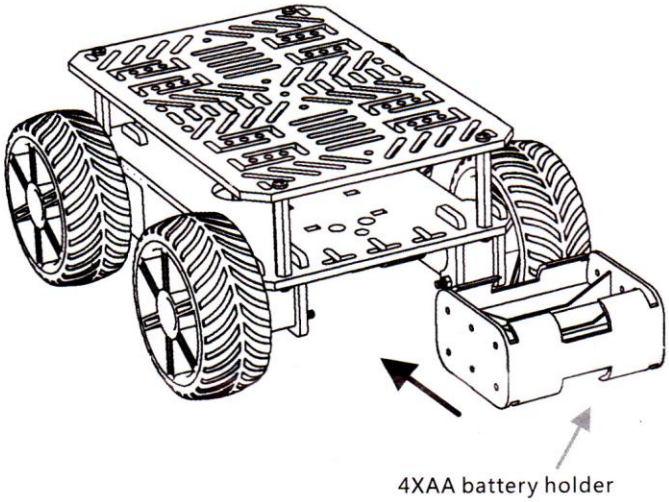

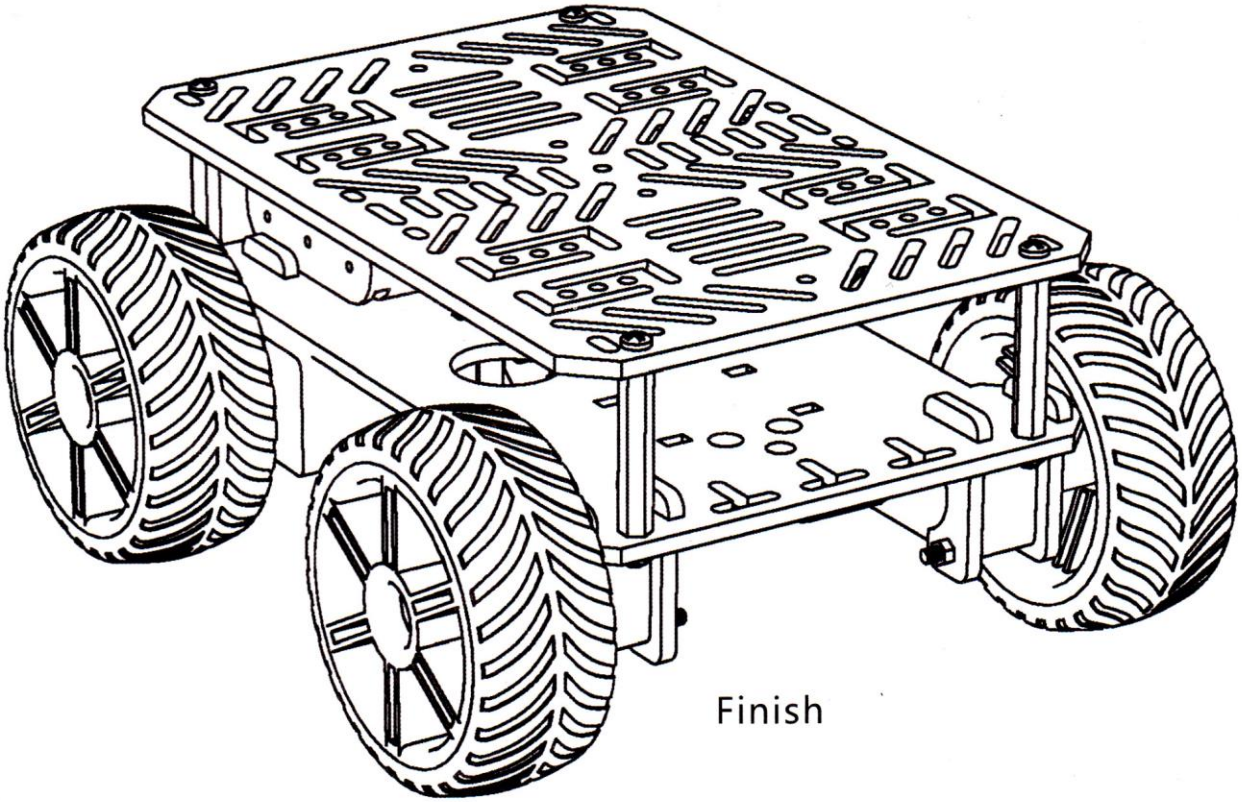

Finish